5° SKEW VARIABLE BRIDGE WIDTH 2:1 FILL SLOPES
WINGS SKEWED 50% FROM ROADWAY TO BREASTWALL

ABUTMENT SKEW CORRECTION FCTOR (SCF) = 1.004

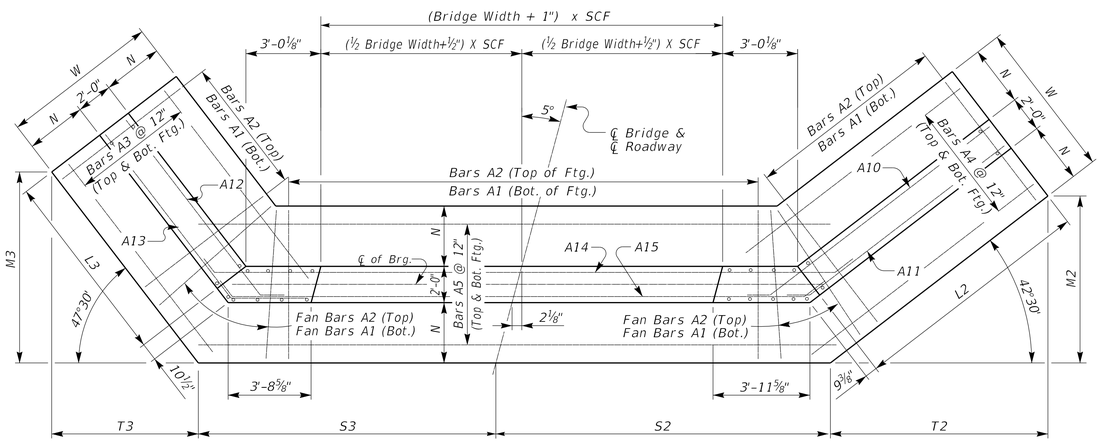

(Left Skew as shown;right skew opp. hand)

PLAN

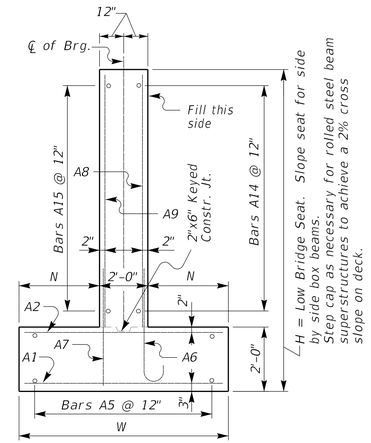

WALL SECTION

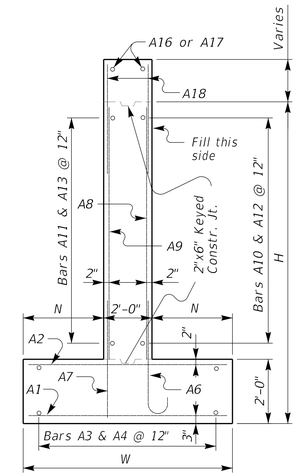

WING SECTION

Note: Trim A16 & A17 bars if necessary

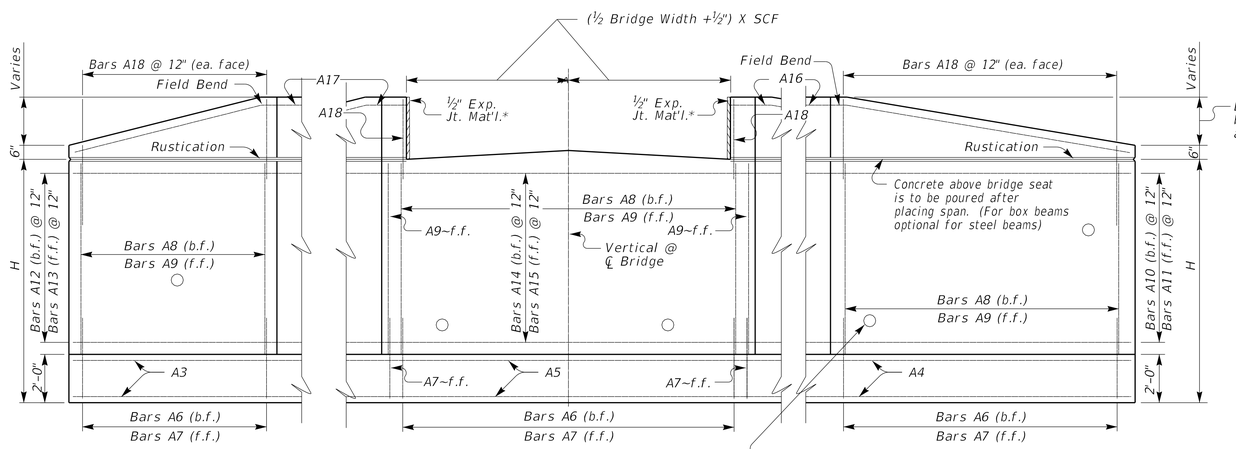

*Expansion Joint Material:
AASHTO M153
Type-I Sponge Rubber

ELEVATION

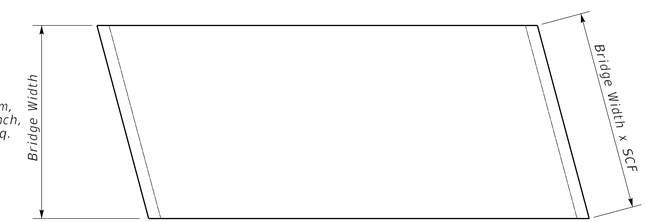

PLAN OF SUPERSTRUCTURE SLAB

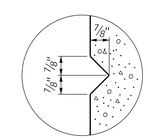

RUSTICATION GROOVE

REVISION DATE: 08/11/2025
REVISION NUMBER: 0

SUBMITTED 08-11-2025 DIVISION DIRECTOR DATE
APPROVED 08-11-2025 STATE HIGHWAY ENGINEER DATE

BRIDGE STANDARDS

COMMONWEALTH OF KENTUCKY
DEPARTMENT OF HIGHWAYS

5° SKEW SUPPORT VARIABLE WIDTH ABUTMENT 50% SKEWED WINGS

STANDARD DRAWING NUMBER
BSA-003-01

OpenRoads Designer v23.00.01.11